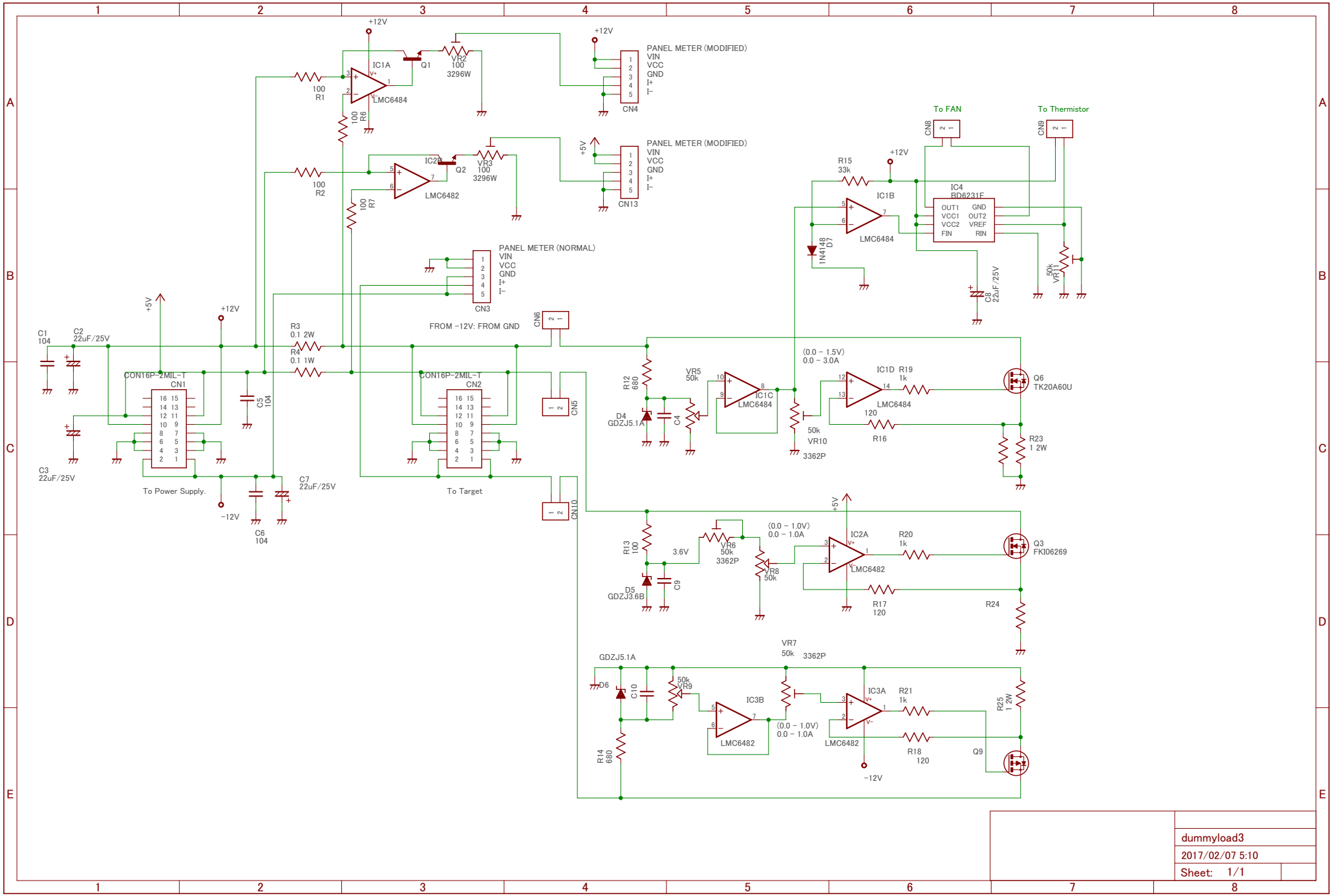
+12V
IC1A
LMC6484
Q1
VR2
100
3296W
100
R1
100
R6
PANEL METER (MODIFIED)
VIN
VCC
GND
I+
I−
CN4
IC2B
LMC6482
Q2
VR3
100
3296W
100
R2
100
R7
+5V
CN13
PANEL METER (NORMAL)
CN3
FROM −12V: FROM GND
CN6
To FAN
To Thermistor
CN8
CN9
R15
33k
IC1B
IC4
BD6231F
OUT1
GND
VCC1
OUT2
VCC2
VREF
FIN
RIN
1N4148
D7
C8
22uF/25V
50k
VR11
C1
104
C2
22uF/25V
C3
22uF/25V
CON16P-2MIL-T
CN1
To Power Supply.
−12V
C5
104
C6
104
C7
22uF/25V
R3
0.1 2W
R4
0.1 1W
CON16P-2MIL-T
CN2
To Target
CN5
CN10
R12
680
D4
GDZJ5.1A
C4
VR5
50k
IC1C
LMC6484
(0.0 − 1.5V)
0.0 − 3.0A
IC1D
R19
1k
LMC6484
120
R16
50k
VR10
3362P
Q6
TK20A60U
R23
1 2W
R13
100
3.6V
VR6
50k
3362P
D5
GDZJ3.6B
C9
VR8
50k
(0.0 − 1.0V)
0.0 − 1.0A
IC2A
LMC6482
R20
1k
R17
120
Q3
FKI06269
R24
GDZJ5.1A
D6
C10
50k
VR9
IC3B
LMC6482
VR7
50k
3362P
(0.0 − 1.0V)
0.0 − 1.0A
IC3A
LMC6482
R21
1k
R18
120
R25
1 2W
Q9
R14
680
−12V
dummyload3
2017/02/07 5:10
Sheet: 1/1